Unicare by ZING®
Horizontal Safety Shower Wall Mount with ABS Dome

Part Number:
52121111

Technical Data

Type:	Plumbed Safety Shower
Mount Type:	Horizontal Wall Mount
Shower Dome Material:	ABS Plastic
Pipe/Fitting Material:	Galvanized Steel
Valve Type/Material:	Stay-open Brass
Activation:	Pull Rod
Operating Pressure:	30 PSI (Recommended)
Flow Rate:	20 GPM Minimum
Flush Duration:	15 Minutes Minimum
Water Requirement:	Potable, Tepid Water
Water Temperature:	60°F-100°F (Recommended)
Supply Connection:	1" NPTF
Compliance:	3rd Party UL Tested to ANSI/ISEA Z358.1-2014
Safety Sign Included:	Yes
Inspection Tag Included:	Yes



Unique **"Swirlflow"** shower head design delivers a deluge of water when the body is exposed to corrosive materials. The compact water pattern relies on efficient fluid dynamics for adequate and complete drenching.

Unicare™ by ZING

Packaging Details

Package Quantity:	1 Each
Approx. Weight:	11.25 lbs.
Dimensions:	12" x 8" x 24"
UPC:	810224583681
Country of Origin:	India

Product Description

- Wall-mounted horizontal drench shower provides emergency full-body flushing
- Swirlflow shower head with durable ABS dome delivers broad, consistent water coverage
- Stay-open brass valve allows continuous hands-free flushing once activated
- High-visibility powder-coated pull rod provides quick, easy activation
- Galvanized steel piping with corrosion-resistant finish provides lasting durability
- 100% hydrostatically tested to help ensure secure, reliable connections

⚠ ***WARNING:*** *Cancer and Reproductive Harm-www.P65Warnings.ca.gov*

© 2026 ZING Green Safety Products

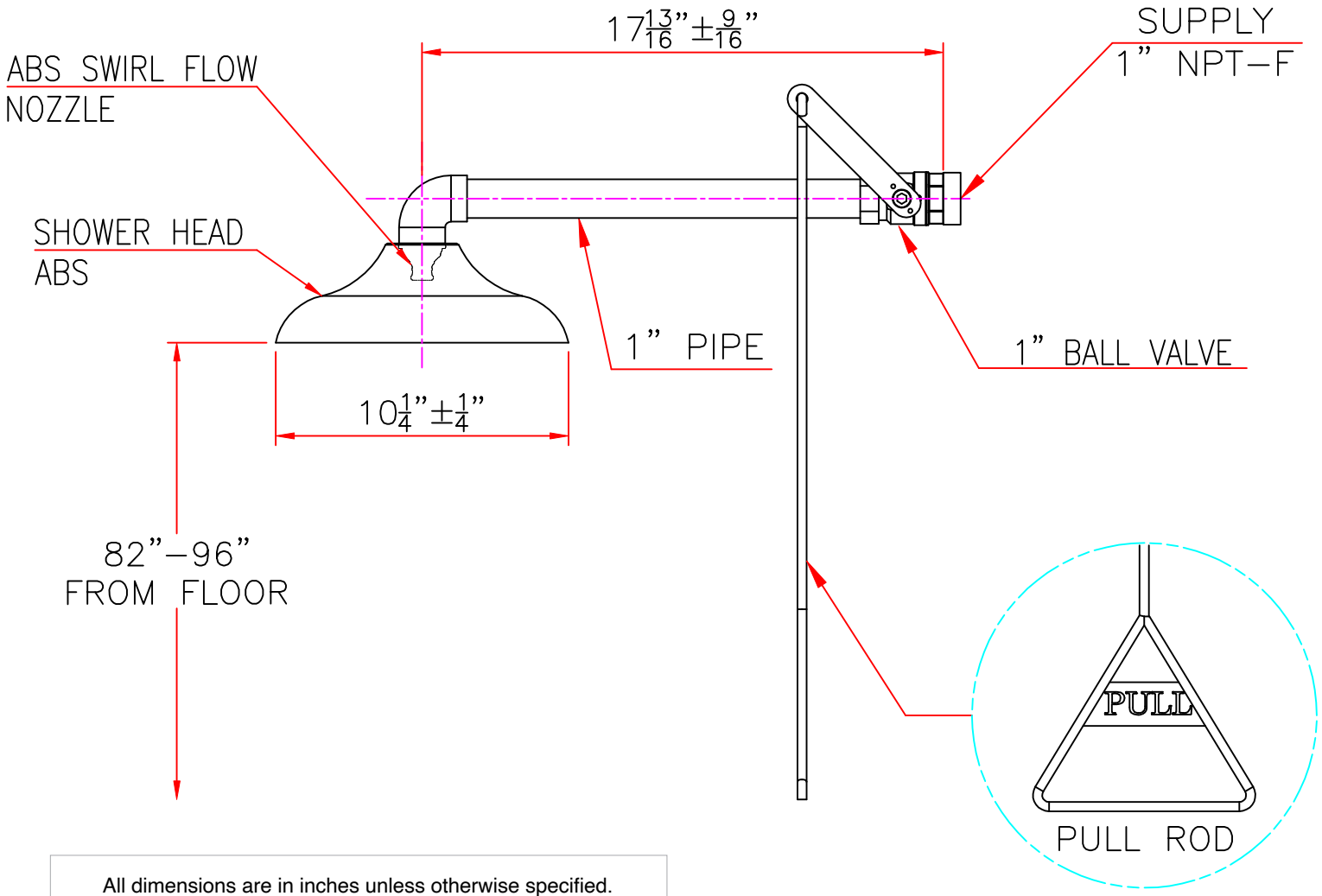

All dimensions are in inches unless otherwise specified.