Unicare by ZING®
Faucet Mounted Eye and Face Wash

Part Number:
91251601

Technical Data	
Type:	Plumbed Eye/Face Wash
Mount Type:	Faucet Mount
Material:	Chrome-Plated Brass
Activation:	Pull Knob
Operating Pressure:	30 PSI (Recommended)
Flow Rate:	3.0 GPM Minimum
Flush Duration:	15 Minutes Minimum
Water Requirement:	Potable, Tepid Water
Water Temperature:	60°F-100°F (Recommended)
Faucet Connection:	55/64" - 27 Female
Compliance:	ANSI Z358.1-2014

Packaging Details	
Package Quantity:	1 Each
Weight:	2.25 lbs.
Dimensions:	8.66" x 5.51" x 2.55"
UPC:	810224583995
Country of Origin:	India



Unicare™ by ZING

- Converts a conventional faucet into an emergency eye/face wash
- Single-motion pull knob activates emergency flushing in less than one second
- Adjustable dual spray heads deliver a soft, non-splashing water flow
- Chrome-plated brass construction provides durability and corrosion resistance
- Space-saving faucet-mounted design is ideal for laboratories and work areas
- Allows conventional faucet use when emergency eyewash is not activated

⚠ ***WARNING:*** *Cancer and Reproductive Harm-www.P65Warnings.ca.gov*

© 2026 ZING Green Safety Products

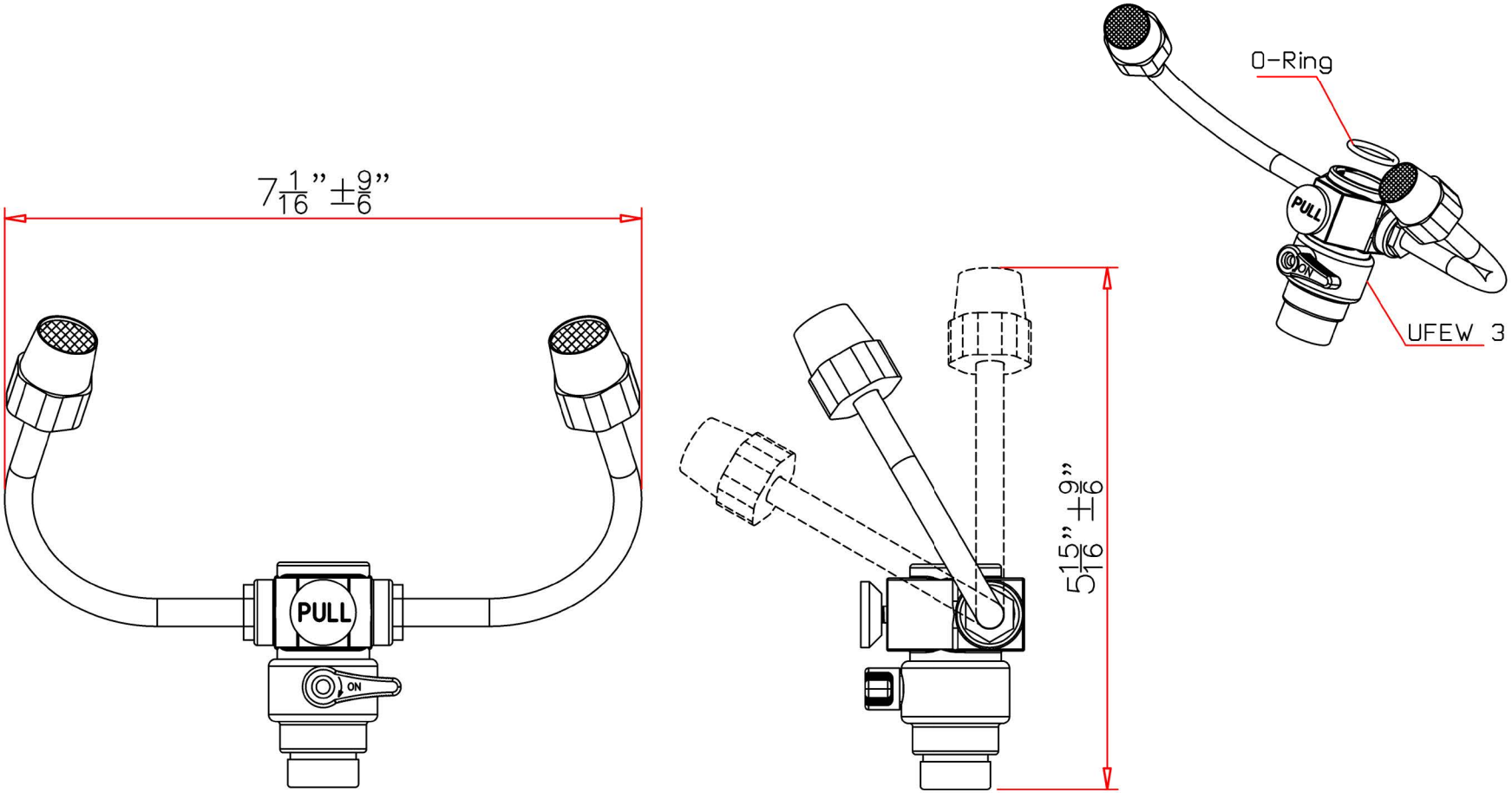

All dimensions are in inches unless otherwise specified.