Unicare by ZING®
Eye and Face Wash Wall Mount with Stainless Steel Covered Bowl

Part Number:
51124451

Technical Data

Type:	Plumbed Eye/ Face Wash
Mount Type:	Wall Mount
Bowl Material:	Stainless Steel
Spray Nozzle Material:	Stainless Steel
Pipe/Fitting Material:	Stainless Steel
Valve Type/Material:	Stay-open/Stainless Steel
Activation:	Push Plate
Operating Pressure:	30 PSI (Recommended)
Flow Rate:	3.0 GPM Minimum
Flush Duration:	15 Minutes Minimum
Water Requirement:	Potable, Tepid Water
Water Temperature:	60°F-100°F (Recommended)
Inlet Size:	1/2" NPTF
Drain Size:	1 1/4" NPTF
Compliance:	3rd Party UL Tested to ANSI/ISEA Z358.1-2014
Safety Sign Included:	Yes
Inspection Tag Included:	Yes



Uni(care)™ by ZING

Packaging Details

Package Quantity:	1 Each
Approx. Weight:	10 lbs.
Dimensions:	14"L x 14"W x 15"D
UPC:	810224583674
Country of Origin:	India

Product Description

- Durable stainless steel is highly resistant to rust and corrosion
- Stainless steel bowl, cover and push plate make it ideal for harsher environments
- Dual spray nozzles provide simultaneous flushing of both eyes
- Stay-open valve provides hands-free operation
- Features a built-in pressure compensator, filter and aerator for precise flow
- 100% hydrostatic pressure tested to help ensure leak-free connections

⚠ ***WARNING:*** *Cancer and Reproductive Harm-www.P65Warnings.ca.gov*

© 2026 ZING Green Safety Products

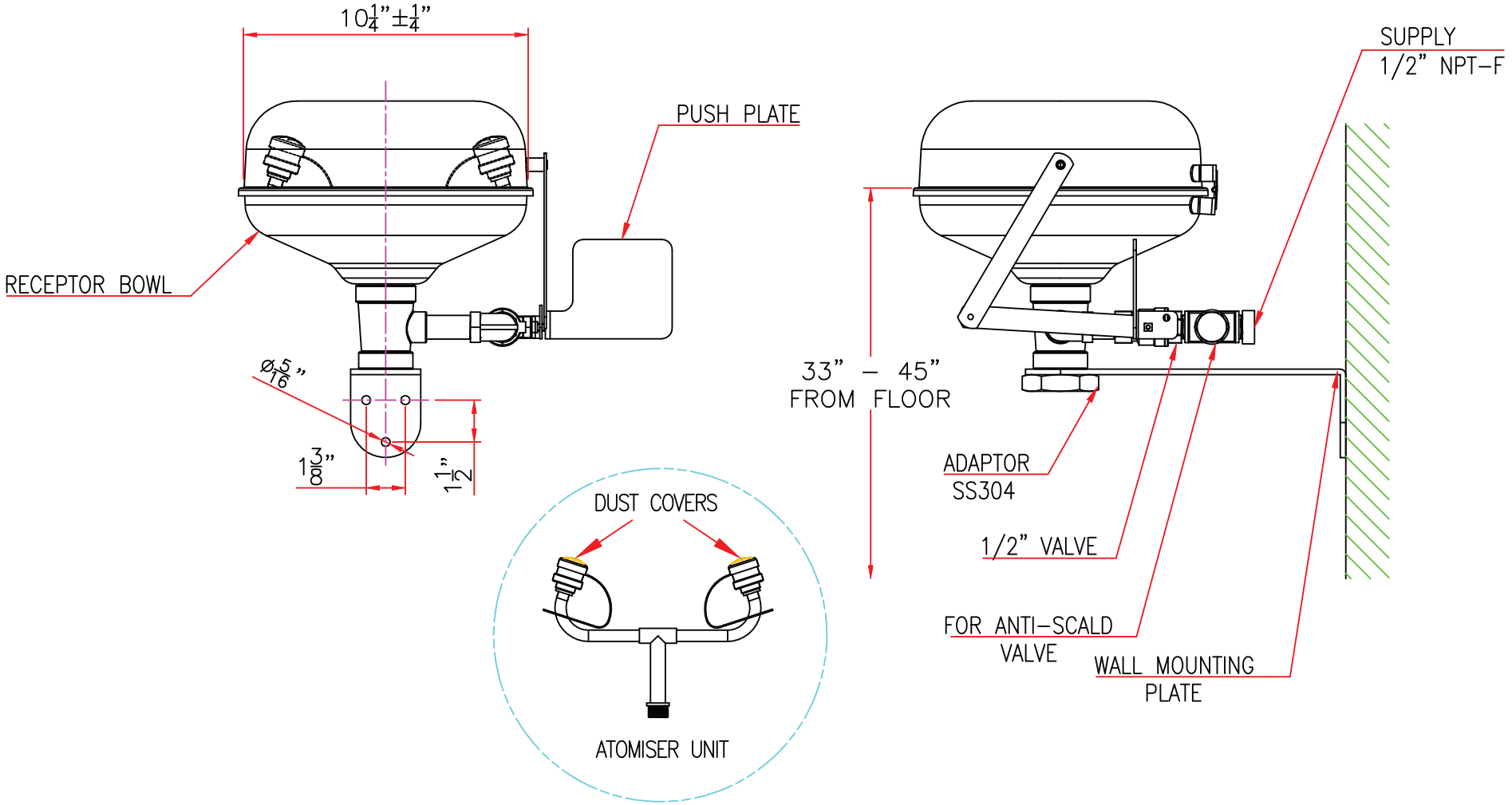

All dimensions are in inches unless otherwise specified.